BNL - 66305

INTERCOMPARISON OF AIRBORNE AND SURFACE-BASED MEASUREMENTS OF CONDENSATION NUCLEI IN THE REMOTE MARINE TROPOSPHERE DURING ACE 1

R. J. Weber,[1*] P. H. McMurry,[2] T. S. Bates,[3] A. D. Clarke,[4]
D. S. Covert,[5] F. J. Brechtel,[6†] and G. Kok[7]

February 1999

Accepted for publication in
Journal of Geophysical Research

[1] Environmental Chemistry Division, Brookhaven National Laboratory, Upton, New York.
[2] Particle Technology Laboratory, Department of Mechanical Engineering, University of Minnesota, Minneapolis.
[3] NOAA/Pacific Marine Environmental Laboratory (PMEL), Seattle, Washington.
[4] School of Ocean and Earth Science and Technology, University of Hawaii, Honolulu.
[5] Department of Atmospheric Sciences, University of Washington, Seattle.
[6] Department of Atmospheric Science, Colorado State University, Fort Collins.
[7] Research Aviation Facility, National Center for Atmospheric Research, Boulder, Colorado.
[*] Now at: Georgia School of Earth and Atmospheric Sciences, Georgia Institute of Technology, Atlanta, Georgia.
[†] Now at: Environmental Chemistry Division, Brookhaven National Laboratory, Upton, New York.

By acceptance of this article, the publisher and/or recipient acknowledges the U.S. Government's right to retain a non exclusive, royalty-free license in and to any copyright covering this paper.

This research was performed under the auspices of the U.S. Department of Energy under Contract No. DE-AC02-98CH10886.

Intercomparison of airborne and surface-based measurements of condensation nuclei in the remote marine troposphere during ACE 1

R. J. Weber,[1,2] P. H. McMurry,[3] T. S. Bates,[4] A. D. Clarke,[5] D. S. Covert,[6]
F. J. Brechtel,[7,8] and G. L. Kok[9]

Abstract. Intercomparisons of aerosol particle number concentrations measured with various condensation particle counters (CPCs) during the first Aerosol Characterization Experiment (ACE 1) are made to assess the accuracy of the airborne measurements. When no ambient 3-10 nm diameter particles (nanoparticles) were present, median concentrations from four CPCs on the National Center for Atmospheric Research (NCAR) C-130 aircraft agreed to within ~6% and were highly correlated ($r > 0.9$). These instruments sampled from several different inlets and used various arrangements (e.g., tubing size and length, flow rates) to transport sampled air to the detectors. When the ambient aerosol contained significant numbers of nanoparticles, agreement between the CPCs deteriorated, likely from differences in nanoparticle transmission and detection efficiencies. During these periods, average total number concentrations measured by two ultrafine CPCs varied on average by 60% with a correlation coefficient of 0.85. Intercomparisons of airborne and surface-based measurements were made during low-altitude flybys of surface measurement sites. During flybys, few nanoparticles were detected, and measured total condensation nuclei (CN) concentrations differed by roughly +5 to -20% ($CN_{surface}/CN_{airborne}$-1) suggesting that the airborne measurements of fine aerosols agreed with ambient surface values to within 20%. Overall, we found that ambient fine particles (~20-100 nm diameter) are fairly insensitive to airborne sampling techniques and thus are likely to be measured accurately. Sampling losses of smaller particles, however, may lead to a significant undermeasurement of ambient CN concentrations in rare instances when the number spectra are dominated by the smallest particles. This intercomparison involves measurements made in regions absent of liquid water to avoid artifact particles produced by fragmenting water droplets.

1. Background

Although airborne measurements of aerosols are routinely made, their accuracy is uncertain due to difficulties in extracting and transporting a representative sample to the aerosol detector without alteration (see *Baumgardner and Huebert* [1993] for an overview). Compared to surface-based measurements, airborne sampling is complicated by numerous factors that can lead to inaccurate measurements of the ambient aerosol concentration and composition. Particle concentrations are affected by the trajectories of air entering the sampling inlet and by the arrangement for transporting sampled air to the detector. Thus measurements can depend on the location of the inlet on the airframe *Twohy and Rogers* [1993], on aircraft maneuvers, such as changes in aircraft speed and orientation [*Baumgardner and Huebert*, 1993], and on the location of the detector within the cabin relative to the inlet. Furthermore, aerosol composition can be altered by evaporation of volatile species due to dynamic heating when the sample is decelerated from aircraft speeds (~100 m s^{-1}) to those accommodated by sampling devices (~1 m s^{-1}) [*Porter et al.*, 1992].

Processes that affect sampling efficiencies depend on particle size. Under anisokinetic sampling conditions, which occurs when either the probe is misaligned with the free stream, or the velocity at the inlet sampling plane differs from the free stream velocity, inlet aspiration efficiencies are a strong function of particle size, with large particles being most affected [*Belyaev and Levin*, 1974]. For these particles, anisokinetic sampling efficiencies are less than unity when the free stream air speed approaching the inlet is less than the speed of the sampled air at the inlet tip (superisokinetic), while efficiencies exceed unity when the free stream air speed exceeds the speed of the sampled air (subisokinetic). Deposition within the inlet can also lead to measurement errors. Large particles (diameters >1 μm) are preferentially lost by inertial effects. For example, turbulent inertial deposition [*Liu and Agarwal*, 1974] in the diffusing section of an inlet has been found to significantly deplete large particles [*Huebert et al.*, 1990]. The inability of larger particles to adjust to changes in the gas velocity, such as at bends in sampling lines, also leads to undersampling. Furthermore, large particles may also be lost by gravitational settling during transmission to the detector; the size cutoff will depend on the length of the transmission line. Nanoparticles (diameters less than ~20 nm) readily adjust to changes in gas velocities, do not appreciably settle, but are readily transported to surfaces by Brownian diffusion. To minimize these losses, flows should be laminar rather than turbulent [*Friedlander*, 1977; *Gormley and Kennedy*, 1949], and to minimize mixing, straight tubing runs are preferred. Because particle sampling loss mechanisms

[1]Environmental Chemistry Division, Brookhaven National Laboratory, Upton, New York.
[2]Now at Georgia School of Earth and Atmospheric Sciences, Georgia Institute of Technology, Atlanta.
[3]Particle Technology Laboratory, Department of Mechanical Engineering, University of Minnesota, Minneapolis.
[4]NOAA/Pacific Marine Environmental Laboratory (PMEL), Seattle, Washington.
[5]School of Ocean and Earth Science and Technology, University of Hawaii, Honolulu.
[6]Department of Atmospheric Sciences, University of Washington, Seattle.
[7]Department of Atmospheric Science, Colorado State University, Fort Collins.
[8]Now at Environmental Chemistry Division, Brookhaven National Laboratory, Upton, New York.
[9]Research Aviation Facility, National Center for Atmospheric Research, Boulder, Colorado.

dominate at the small and large end of the ambient aerosol spectra, midsized particles (~20 nm to 100 nm diameter) are more likely to be sampled accurately.

Studies of airborne aerosol sampling efficiencies show larger errors may occur when measuring aerosol mass concentrations [*Huebert et al.*, 1990; *Porter et al.*, 1992; *Sheridan and Norton*, 1998]. In one of the first sampling studies, *Huebert et al.* [1990] reported that airborne measurements of aerosol mass concentrations may commonly underestimate ambient concentrations by factors of 2 to 10. By extracting wall deposits within the sampling system from measurements in marine regions, mass transmission efficiencies of 10 to 20% for marine sodium particles, and at most 50% for particulate non-sea-sulfate were observed [*Huebert et al.*, 1990]. Because previous studies showed that supermicron marine particles are predominately sodium, and smaller submicron accumulation mode particles (0.1-1 µm diameter) non-sea-salt-sulfate, Huebert and coworkers concluded there were high losses of supermicron particles and smaller, yet still significant, losses of submicron particles.

Subsequent airborne sampling studies by *Porter et al.* [1992] and *Sheridan and Norton* [1998] similarly found that large particles were sampled with poor efficiencies. In contrast, however, they found that sampling efficiencies of submicron particles were closer to unity. *Sheridan and Norton* [1998] designed a special inlet-filter arrangement to collect particles with minimal losses. Verified in wind tunnel tests, this inlet was used to assess the performance of a conventional sampling arrangement involving a diffusing inlet and long transmission tubing leading to a filter within the aircraft cabin. Measurements of aerosol chemical composition in polluted air masses were used to indirectly assess the mass passing efficiency of the conventional inlet. The highest mass differences were observed for the highest air speeds and for species expected to be found in the largest particles. Crustal material, which is primarily associated with supermicron particles, had mass transmission efficiencies of 10 to 50%, while species associated with fine particles (sulfates and ammonium), had mass transmission efficiencies of about 80 to 90%, indicating that few fine particles were lost. These types of studies, which are based on composition comparisons from extraction's of filters and inner sampling surfaces, provide limited insights into size-dependent sampling losses, since aerosol size-resolved composition can vary with location and the samples are bulk in nature.

By focusing on ambient aerosol mass measurements, previous studies have dealt primarily with sampling efficiencies of supermicron particles. This paper assesses the accuracy of airborne Condensation Particle Counter (CPC) measurements of total number concentration. Because fine particles are most numerous [*Covert et al.*, 1996], this intercomparison primarily studies sampling efficiencies of particles ranging is size from roughly 20 nm to 100 nm in diameter. Measurements of total number concentrations also limit studies of size dependent sampling efficiencies. However, by intercomparing airborne measurements when no 3-10 nm particles (nanoparticles) were detected to events when new particle formation resulted in nanoparticles comprising a significant fraction of the total aerosol number concentration, we can roughly investigate sampling efficiencies of nano and fine particles. As in all studies aimed at assessing the measurement accuracy of ambient species, we have no absolute measurement of the true ambient aerosol concentration. Thus to determine the accuracy of the airborne measurements, we intercompare the measurements among themselves and then compare the airborne measurements with those made from surface-based sites. The assumption is that the mechanisms of particle loss in the various airborne sampling systems, and airborne versus surface-based sites, will differ so that intercomparisons will provide insights into sampling methodologies that result in minimal losses.

2. Inlets and Instrumentation

During the first Aerosol Characterization Experiment (ACE 1), over 20 CPCs were deployed in various capacities and locations in the pristine marine region south of Australia. On the National Center for Atmospheric Research (NCAR) C-130 research aircraft, three institutions fielded four CPCs that were used to measure total aerosol particle number concentrations. Identical CPCs were also deployed on the National Oceanic and Atmospheric Administration (NOAA) R/V *Discoverer* and at ground-based sites at Cape Grim and Macquarie Island.

In this study we intercompare measurements from nine CPCs, fielded by six different research institutions. Four were located on the NCAR C-130 aircraft, one was on board a ship (the NOAA *Discoverer*), and two were at each of two different ground-based sites (Macquarie Island and Cape Grim). The instruments were all TSI (TSI Inc., St. Paul, Minnesota) continuous flow CPCs, except for the UM PHA ultrafine condensation particle counter (UCPC), which was the prototype of the TSI 3025 UCPC. Prior to ACE 1, the instruments were intercompared and calibrated at a CPC intercomparison workshop undertaken with the aim to improve the accuracy of the field measurements [*Wiedensohler et al.*, 1997]. The results are given in Tables 1a and 1b. Note that the UCPCs (Table 1a) count all particles larger than ~3 nm diameter, while the CPCs (Table 1b) only count particles larger than about 10 nm diameter. For all CPCs, the upper size limit is not explicitly known but is likely near 3 µm diameter. Measured total particle number concentrations from the UCPCs and CPCs are referred to as CN_3, and CN_{10}, respectively. A summary of the abbreviations and acronyms used in this paper are given in the Notation. Throughout this paper, unless otherwise stated, the reported particle concentrations are at ambient conditions. This eliminates discarding data during gaps in the temperature or pressure measurement records. Differences in temperature and pressure between platforms will affect comparisons of particle densities reported as volumetric concentrations. However, in this study, because comparisons are made among measurements on the same platform, or between platforms in close proximity, we estimate that concentration differences are less than 1% due to differences in temperature and pressure. For more detailed information on instrumentation, the reader is referred to the ACE 1 overview report [*Bates et al.*, 1998].

Table 1a. Ultrafine Condensation Particle Counters Intercompared

Location/Sampling Inlet	Research Institution	Model	Detection Limit, D_{p50}, nm
C130/CAI (airborne)	UH	TSI 3025	2.4*
C130/CAI (airborne)	UM	PHA UCPC	2.5*
R/V *Discoverer* (ship)	PMEL	TSI 3025	2.5*
Cape Grim (land)	UW	TSI 3025	2.8*
Macquarie Island (land)	CST	TSI 3025	2.5*

D_{p50} is the particle diameter where the instrument's particle detection efficiency equals 50%. Definitions of acronyms are given in the Notation. Note, the particle detection limits stated are differential mobility (DMA) predicted sizes [*Knutson and Whitby*, 1975], which have not been corrected for diffusion within the DMA. Diffusion-corrected detection limits are expected to be closer to 3.0 nm diameter [*Stolzenburg*, 1988].

*Based on pre-ACE 1 workshop [*Wiedensohler et al.*, 1997] at 1 atm pressure.

Table 1b. Condensation Particle Counters (CPCs) Intercompared

Location/Sampling Inlet	Research Institution	Model	Detection Limit D_{p50}, nm
C130/CAI (airborne)	UH	TSI 3010	11.3*
C130/RAF Inlet (airborne)	NCAR RAF	TSI 3760	15†
Cape Grim (land)	UW	TSI 3010	11.9*
Macquarie Island (land)	CST	TSI 3010	11.8*

D_{p50} is the particle diameter where the instrument's particle detection efficiency equals 50%. Definitions of acronyms are given in the Notation.

*Based on pre-ACE 1 workshop [*Wiedensohler et al.*, 1997] at 1 atm pressure.

†Generic TSI 3760 [*Zhang and Liu*, 1991] at 1 atm pressure.

2.1. Airborne Instrumentation

The aircraft CPCs sampled from two different inlets, and each research institution used its own transmission lines running from the inlets to detectors. Figure 1 is a schematic of the sampling layout of the four airborne CPCs intercompared. The two inlets were very different. Mounted on the aircraft side, the Community Aerosol Inlet (CAI) extended forward to near the tip of the aircraft nose. It is a shrouded, thin-walled inlet (tip outside to inside diameter (OD/ID) of ~1.1), about 6.7 m in total length, and with a tip inside diameter of about 4 cm. The CAI was large to accommodate multiple instruments sampling isokinetically with individual tubes from the extraction plane within the inlet. In contrast, the NCAR Research Aviation Facility's (RAF) inlet was mounted on the aircraft belly, was not shrouded, had a blunt tip (OD/ID~5.4), and was much smaller, approximately 4 cm long with a tip inside diameter of ~0.1 cm. Only the RAF CPC sampled from this inlet. Flow rates in both inlets were actively controlled to maintain nominally isokinetic

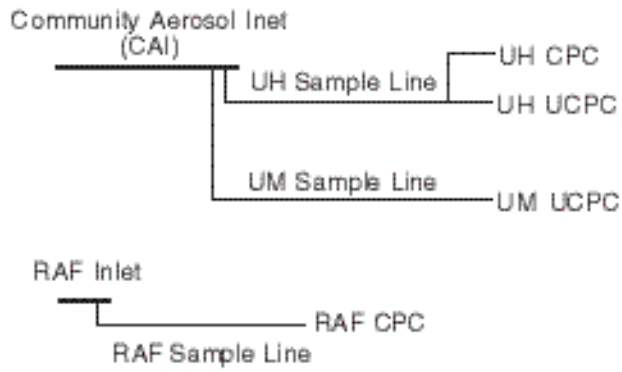

Figure 1. Schematic of the arrangement of aerosol inlets and sample transmission tubing for the four airborne CPCs intercompared. The figure is not to scale. The community aerosol inlet (CAI) was approximately 6.7 m long with a tip inside diameter (ID) of ~4 cm. The RAF inlet was approximately 4 cm long with a tip ID of ~0.1 cm. The UH sample line was 1.9 cm ID electrically conducting tubing ~3 m long with a Reynolds number of 7500. Following this, the sample air was transmitted to the CPCs via typically 0.64 cm ID tubing at Reynolds numbers below 400. The UM sample line was 2.5 cm ID copper tubing about 5 m long with a Reynolds number of ~1800. Sample was extracted from the centerline of this tube near the UM PHA-UCPC. The RAF sample line was 0.64 cm ID conductive tubing, 3 m long with a Reynolds number of ~800.

sampling. Poststudy measurements suggest that the CAI inlet likely did not efficiently pass particles larger than 3 µm diameter (B. J. Huebert, personal communication, 1998).

The tubing diameter, length, and flow rates for transmitting particles from the inlet to individual CPCs varied. The University of Hawaii (UH) sampling system consisted of a 1.9 cm ID, 3 m long electrical conductive tubing running from the CAI to the instrument rack. The flow in this tube was turbulent with Reynolds number ~7500. The flow from there was split a number of times en route to the CPCs. The total length to the UCPC from the first split was roughly 2 m long, and downstream of this split the flow was laminar with Reynolds numbers ranging from 200 to 400. A number of bifurcations in sampling lines were required because a variety of instruments sampled from the line running from the CAI. In an attempt to minimize particle losses during transport to the UH UCPC, the flow was split by tees, keeping the line to the UCPC on the straight path through all tees.

Particles were transmitted to the University of Minnesota (UM) pulse height analysis (PHA) UCPC from the CAI via ~5 m of tubing. Because the UM PHA UCPC was fielded specifically to study nanoparticles, the transmission tube was designed to transmit nanoparticles efficiently. This was done by using a 2.5 cm ID copper transport tube with a flow rate of ~30 L min^{-1} (Reynolds number ~1800). At the instrument, sample air at ~4 L min^{-1} was extracted from the transport tube centerline with a 0.64 cm ID copper tube (Reynolds number ~1200). The distance from this centerline extraction to the instrument was about 30 cm. This arrangement minimized

sampling air that was near the transport tube walls, where higher losses of nanoparticles are expected. It did, however, have the drawback that under certain conditions when sampling air containing cloud droplets, particles were generated within the sampling line. This likely occurred at the centerline extraction points. This phenomena confounded measurements of ambient aerosols in regions containing liquid water [*Weber et al.*, 1998a].

The RAF CPC used a 0.64 cm ID electrically conductive tube ~3 m long with a nominal flow rate of 3 to 4 L min^{-1} (Reynolds number ~700 to 900). In the CAI, 90° bends were used to bring the aerosol into the cabin. A shallow bend was used for the RAF inlet. In all cases, additional bends in sample lines were minimized and kept as shallow as possible.

The various sampling configurations (Figure 1) allow us to compare how various components affect airborne CN measurements. By comparing the two UH CPCs, we can assess instrument variability, since both instruments sampled from the same inlet and transmission line. Comparing the UH CPCs with the UM PHA UCPC allows comparison of sampling transmission lines and instruments, since these instruments all sampled from a common inlet. A comparison of two completely different airborne aerosol measurement systems is possible by contrasting the UH and UM CPCs to the RAF CPC.

2.2. Ground-Based Instrumentation

Ship-based aerosol sampling was done through a mast 18 m above sea level topped with an inlet positioned so that is pointed into the relative wind. Sample air was transported to the deck at 1000 L min^{-1} through a 6 m long, 20 cm diameter tube (Reynolds number ~7000). Aerosol measurements were made from air isokinetically sampled from the mast at 30 L min^{-1} via 1.9 cm diameter tubes (Reynolds number ~2200).

Ground-based measurements at Cape Grim (40.7°S, 144.7°E) were located at the Australian Baseline Air Pollution Monitoring Station, which is situated on a bluff 94 m above sea-level. Air was sampled through a 10 m stainless steel tube (i.e., 104 m above sea-level) with the flow maintained at a Reynolds number near 2300. Sample flow was extracted near the instruments. At Macquarie Island (54.5°S, 159.0°E), the aerosol inlet was a 5 m high, 8 m long, 1.1 cm ID electrically conducting plastic tube with a flow rate of 20 L min^{-1} (Reynolds number ~2550) [*Brechtel et al.*, 1998].

3. Intercomparison of Airborne CN Measurements

A total of 33 research flights were performed during ACE 1. For this intercomparison we focus on five flights (numbers 16, 17, 21, 22, and 27) covering a total of roughly 42 hours of sampling time. These flights were all part of the intensive studies staged from Hobart, Tasmania, Australia. The flights were chosen to span the range of conditions encountered during ACE 1 and involved sampling primarily in clear air. This avoids spurious measurements from fragmentation of water droplets striking the aerosol inlets [*Weber et al.*, 1998a]. Droplet fragmentation is ubiquitous when sampling from aircraft in regions of liquid water, and care must be taken to screen these events from the data. This was aided by focusing on a more manageable size subset of the ACE 1 data set.

For these comparisons, the aircraft altitude ranged from near sea level to about 6 km, corresponding to a minimum ambient pressure of about 0.5 atm. In this pressure range, sampling efficiency and CPC lower detection limit should not be sensitive to changes in pressure [*Zhang and Liu*, 1991].

The size of particles involved in this comparison typically ranged from roughly 10 to 200 nm diameter. Figure 2 shows the arithmetic mean of the aerosol number distribution of dry particles (relative humidity less than 25%) recorded during the five flights intercompared. The 10 and 90 percentiles at each size bin show the range of concentrations. These measurements were made from the CAI via the UH sampling system. The distributions were measured with a scanning mobility particle spectrometer [*Wang and Flagan*, 1990], and in this case, all concentrations are reported at standard conditions (20°C and 1 atm). Additional measurements by wing-mounted optical probes showed that, generally, there were few particles larger than ~300 nm. On average, particles larger than 300 nm represent only about 6% of the total number concentration, and practically all of these particles were less than ~1 µm diameter. In contrast, particles smaller than 10 nm periodically comprised a significant fraction of the total aerosol. Thus, to aid in the intercomparison of the airborne measurements, we subdivided the data into two groups, periods when practically no 3-10 nm particles were present and periods when they comprised a significant fraction of the total aerosol number concentration.

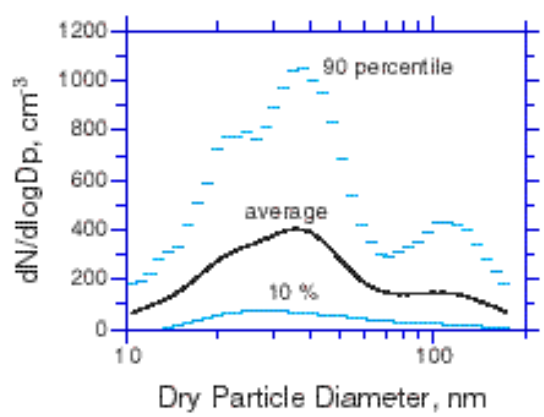

Figure 2. Arithmetic mean of the number size distribution for the period aircraft CN are intercompared (solid line). The 10 and 90 percentile range for each size bin is shown. The particles are dried to a relative humidity less than 25% by heating. Other measurements showed that there were few particles larger than 200 nm, but occasionally high concentrations of sub-10 nm particles were recorded. Thus the intercomparison of airborne CN measurements generally involved particles ranging in size from 10 to 200 nm diameter.

3.1. Regions of No Nanoparticles

The data were segregated based on UM PHA UCPC measurements of 3-4 nm particle concentrations (CN_{3-4}; see *Weber et al.* [1995] for a description of the measurement technique). We use this parameter because it is the most sensitive measure of nanoparticle concentrations. Nanoparticles are considered to be absent only during periods when CN_{3-4} is less than 0.1 cm^{-3}. During these periods, concentrations of 3 to 10 nm particles were also very low. The relative concentration of 3-10 nm particles determined by difference (i.e., UH: $(CN_3-CN_{10})/CN_{10}$) was always less than 10%. At these times, because most particles are larger than ~10 nm diameter, differences in the lower size detection of the airborne CPCs do not affect intercomparisons of total particle concentrations.

Figure 3 compares the measured concentrations of the airborne CPCs. Percentile plots of the same data in Figure 4 show the distributions of the measured concentrations. Table 2 shows the correlation coefficients comparing all airborne CPCs. Overall, these comparisons indicate that in regions of few nanoparticles, measurements of aerosol number concentrations for CPCs on the NCAR C-130 were in very good agreement. As expected, the two CPCs with the most similar sampling systems (UH UCPC and UH CPC, Figure 1) were the most highly correlated, (r=0.995). Intercomparisons and a post-study recalibration of the UH CPC showed that this instrument tended to consistently underestimate concentrations by about 5 to 10% due to uncertainties in the sample flow rate. In this instrument the flow rate is not measured during sampling, but controlled by a critical orifice. The error occurred despite calibration at the pre-ACE 1 calibration workshop demonstrating the importance of in-flight and post study instrument calibrations. The data shown have been corrected for this systematic error.

Table 2. Correlation Coefficients of Measured Number Concentrations in Regions of No Nanoparticles

	UH CN_3	UH CN_{10}	UM CN_3	RAF CN_{15}
UH CN_3	1			
UH CN_{10}	0.995	1		
UM CN_3	0.911	0.903	1	
RAF CN_{15}	0.935	0.931	0.928	1

The best correlation between the UH CPCs which have a common sample line show that differences in configurations for transiting the particles from the inlet to detector is a significant cause for variation among the airborne instruments. This can be due to differences in residence times and the degree of mixing within sampling lines and uncertainties in synchronizing the measurements. The instrument that was most poorly correlated with other CPCs was the UM PHA UCPC, with correlation coefficients as low as 0.903. This instrument sampled over 1 min intervals, whereas all other CPCs sampled over 1 s intervals. For comparison, the data were integrated onto 30 s intervals. Differences in sampling rates may also have contributed to the observed scatter.

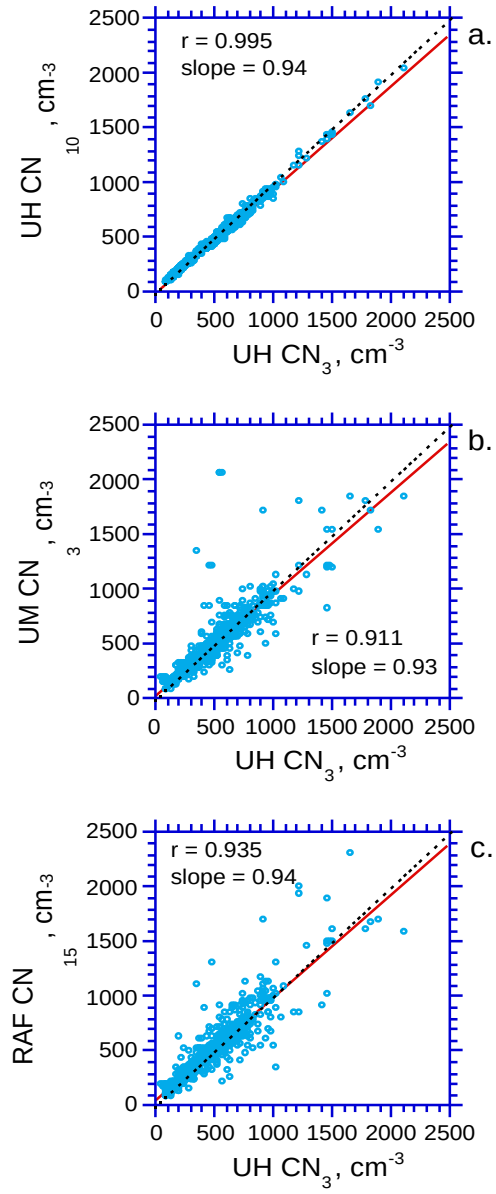

Figure 3. Correlation plots of airborne CPCs for aerosol spectra containing few nanoparticles (3-10 nm diameter). For these data, differences in lower size detection limits of the various instrument models (e.g., UCPC versus CPC) do not affect the comparisons. The correlation coefficient and the slope of the linear regression line are given. For comparison, all data have been integrated onto 30 s averages. The dashed line is the 1:1 line. The plots show that the various measurements of CN are in good agreement and highly correlated. The highest correlation (Figure 3a) is between instruments having common inlets and sample transmission lines (UH CPC and UH UCPC; see Figure 1).

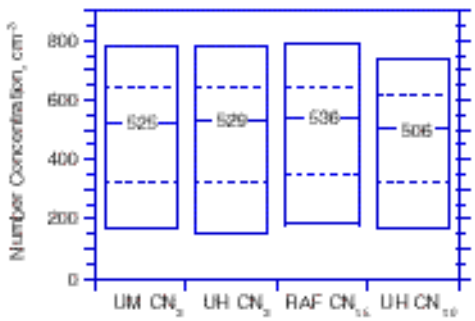

Figure 4. Percentile plots showing distributions of CN concentrations recorded by various airborne CPCs in regions containing no 3-10 nm diameter particles. The top and bottom of the box defines 95 and 5% of the measured concentrations, respectively, and the dotted lines 75 and 25% of the measured concentrations. The centerline is the median concentration (value shown).

Overall, among the airborne CPCs, the median particle concentrations varied from 506 to 536 cm^{-3}, a difference of less than 6%. The largest discrepancy was from the UH CPC, which had uncertainties due to sample flow rates. Not including this instrument in the intercomparison of airborne CPCs, the difference in median concentrations is only 2%. (Note that comparing the median of percent differences among the various CPCs gives similar results.) These differences are well within the measurement uncertainties of the individual instruments. A detailed uncertainty analysis suggests an airborne CPC measurement may have relative uncertainties near 6% [*Twohy*, 1991]. Uncertainty in sample flow rate alone is likely to be a few percent. Considering the uncertainties with each measurement, and the differences in inlets and various techniques for transmitting particles to detectors, the measurements of fine particle number concentrations were fairly insensitive to sampling techniques. This suggests that, in this case, the airborne measurements of fine aerosols were fairly accurate.

3.2. Regions of High Nanoparticle Concentrations

During periods of high nanoparticle concentrations, there were significant differences in the total particle number concentration. Here we focus on periods when number concentrations of particles with diameters between 3 and 10 nm were greater than the number of all particles larger than 10 nm diameter (i.e., UH: $(CN_3-CN_{10})/CN_{10}>1$). These are also periods when the UM PHA UCPC recorded high nanoparticle concentrations. During these periods, the median CN_{3-4} concentration was 84 cm^{-3}, while for all the data (flights 16, 17, 21, 22, and 27), the median value was 0.30 cm^{-3}. The data for this comparison essentially consist of six separate regions where high 3-10 nm particle concentrations were encountered. This is about 1.4 hours of sampling out of ~42 total sampling hours for the five flights analyzed.

Comparisons between number concentrations recorded by the CPCs is shown in Figure 5, and the distributions of measured concentrations by the various CPCs is shown in Figure 6. Note

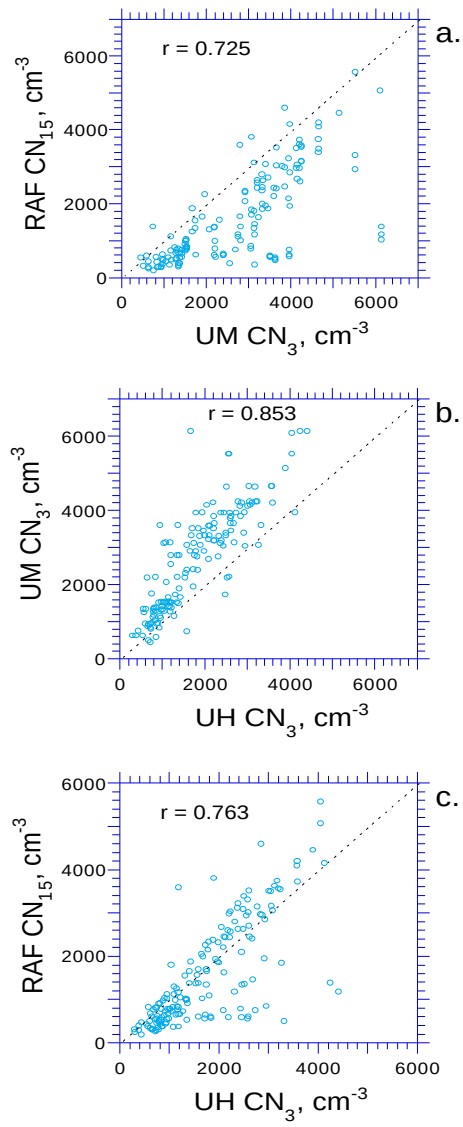

Figure 5. Correlation plots of airborne CPCs for measurements when ambient concentrations of 3-10 nm diameter particles were greater than the number concentration of all particles larger than 10 nm, (i.e., UH: $CN_3-CN_{10} > CN_{10}$). The dashed line is the 1:1 line. Lower correlations between various CPCs compared to measurements when no nanoparticles were present (Figure 3 and Table 2) are likely due to differences in various CPC nanoparticle detection efficiencies, and efficiencies for sampling and transmitting nanoparticles to the detectors. Compared to sampling fine aerosols (Figure 3), these plots demonstrate the difficulties associated with accurately measuring 3-10 nm particle concentrations from aircraft.

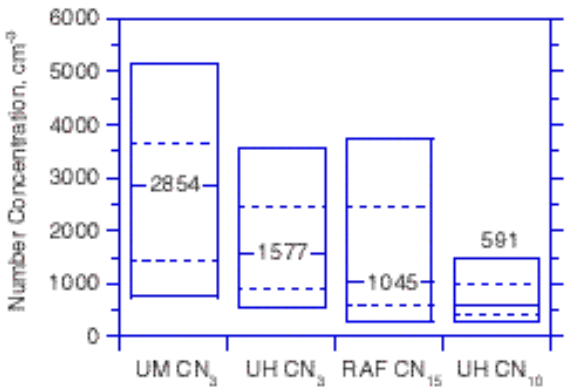

Figure 6. Same as Figure 4, except plotted data only include periods when concentrations of 3-10 nm diameter particles were greater than the number concentration of all particles larger than 10 nm (i.e., UH: CN_3-CN_{10} > CN_{10}). The median concentration for each measurement is shown in the plot.

that the instruments compared in Figures 3a and 5a are different, while the instruments compared in Figures 3b and 5b, and Figures 3c and 5c, are the same. These plots show significant discrepancies in recorded CN concentrations, demonstrating the difficulties with accurately sampling nanoparticles.

The observed differences could be due to a combination of factors. As expected, generally, the UCPCs recorded higher total particle concentrations (CN_3 versus CN_{10} or CN_{15}) due to their ability to measure smaller particles (e.g., see Figure 6). There were a few episodes, however, in which RAF CN_{15} concentrations were higher than both the UH CN_3 and UM CN_3. This may, in part, be from differences in inlet and transmission tubing particle transport efficiencies. For example, if concentrations of particles between 15 and ~20 nm diameter passing the RAF sampling system exceeded concentrations of 3 to ~20 nm passing the UH and UM systems, the RAF CPC would record higher total particle concentrations despite only being able to detect particles larger than ~15 nm diameter. Another cause may be from the high spatial variability observed for nanoparticle concentrations and the differing response times of sampling systems and instruments to abrupt changes in particle concentrations. If the RAF system responded more slowly to concentration changes, RAF measurements would be higher than the other instruments for a short period when comparing measurements in regions where particle concentrations dropped sharply. Differing response times of measurement systems will decrease correlation coefficients.

Concentrations recorded by the two UCPCs also differed. The UM UCPC typically detected the highest particle concentrations. On average, the ratio of the UM CN_3 to UH CN_3 was 1.6. Differences in nanoparticle transmission efficiencies from the inlet to the detectors could be a cause. The system used to transmit particles from the CAI to the UM PHA UCPC was designed specifically to minimize nanoparticle losses by suppressing mixing in the sampling tube (laminar flow), and by sampling from the centerline of the tube near the instrument. Other possibilities include differences in instrument size-dependent counting efficiencies in field operation, or possibly from evaporation of nanoparticles in the UH transmission lines from greater dynamic heating or heat transfer from local hot spots within the cabin.

Compared to measurements of fine aerosols, this analysis demonstrates that accurate sampling of nanoparticles is more difficult. Further insights into the overall accuracy of the airborne aerosol measurements may be provided by comparisons with surface-based measurements.

4. Intercomparison of Airborne and Surface-Based Measurements

Intercomparisons between airborne and surface-based measurements are confounded by uncertainties as to whether the aircraft and surface sites are sampling from identical air masses. This is due in part to limitations in the proximity of the measurements. The lowest altitude attainable by the aircraft during ACE 1 was approximately 30 m above sealevel when sampling over open water. The high speed of the aircraft further complicates the intercomparison. At an aircraft speed of 100 m s^{-1} and average wind speed of ~10 m s^{-1}, in equal time intervals, the airborne measurement will sample in a region approximately 10 times larger than sampled by the surface-based measurement. The effect of these limitations on the quality of the intercomparison will depend on the spatial variability of the aerosols. Despite these limitations, ACE 1 airborne and surface-based measurements show reasonable agreement.

During ACE 1, flybys were made of ground-based sites at Macquarie Island and Cape Grim, and the ship R/V *Discoverer*. Multiple flybys were made of Cape Grim and the ship. Flybys during periods of rain are not compared. For each flyby, an intercomparison is made during the brief interval when the two measurement platforms were at closest approach. Table 3 shows the time interval for the intercomparison, the average surface wind speed, and the average percent difference of the ship- or ground-based measurement to the airborne RAF CPC measurement. In this case, the RAF CPC was chosen as representative of the airborne measurements. Any airborne CPC could be used, since nanoparticle concentrations were very low and all airborne CPCs were in good agreement. A more complete compilation showing the measured particle concentrations, relative humidity, and temperature, along with the ranges of each measurement during flyby intercomparison intervals, is shown in Table 4. The variability in aircraft and surface-based measurements of temperature and relative humidity during these intercomparison intervals provides some insight into the similarities between the surface and airborne-sampled air masses.

The first three rows of Table 3 are airborne and ground-based intercomparisons. From flybys on two different days, the ground-based Cape Grim measurements were consistently higher by at most ~5% over the airborne CN concentrations. The Macquarie Island intercomparison was less extensive than the Cape Grim intercomparison (see *Weber et al.* [1998b] for a more detailed discussion of the Macquarie Island intercomparison). During the Macquarie Island flyby, ground-

Table 3. Average Percent Difference of Ship and Ground-Based UCPCs and CPCs With the C-130-Based RAF CPC During Short Flyby Intervals

Surface Station and Flight Number	Day	Time Interval (UTC)	Surface Wind Speed, m s^{-1}	Surface Station UCPC % Difference*	Surface Station CPC % Difference†
Cape Grim F14	Nov. 24	0155-0158	15.8	+2.5	+1.5
Cape Grim F27	Dec. 10	2333-2336	10.8	+3.1	+5.2
Macquarie Is. F16	Nov. 27	0311-0312	9.0	-10	-7
R/V *Discoverer* F15a	Nov. 25	0110-0114	9.1	-17	
R/V *Discoverer* F15b	Nov. 25	0514-0520	5.9	-18	
R/V *Discoverer* F22a	Dec. 5	0434-0437	2.7	-13	
R/V *Discoverer* F22b	Dec. 5	0539-0541	4.4	-22	
R/V *Discoverer* F22c	Dec. 5	0800-0805	4.5	-17	

*Percent difference calculated by (Surface CN_3/RAF CN_{15}-1) x 100.
†Percent difference calculated by (Surface CN_{10}/RAF CN_{15}-1) x 100.

Table 4. Table of Arithmetic Averages and Ranges (in Parentheses) of Various Airborne and Surface-Based Measurements During Flybys

	Surface Station				C-130		
Surface Station	CN_3	CN_{10}	*T* °C	RH %	RAF CN_{15}	*T* °C	RH %
Cape Grim F14	491	486	12.5 (12.4-12.5)	68 (67-70)	479 (431-721)	10.9 (10.4-11.2)	58 (53-67)
Cape Grim F27	1047	1069	10.7 (10.5-10.8)	65 (63-66)	1016 (941-1102)	9.6 (9.4-9.8)	54 (52-56)
Macquarie Is. F16	501 (498-504)	519 (515-524)	6.3	47	558 (547-568)	3.8 (3.5-4.2)	59 (56-67)
R/V *Discoverer* F15a	362 (349-368)		8.7	81	434 (418-495)	8.4 (7.8-8.6)	74 (71-76)
R/V *Discoverer* F15b	297 (293-303)		8.9	81	364 (306-483)	7.4 (5.2-9.1)	72 (66-82)
R/V *Discoverer* F22a	578 (546-640)		11.2	54	662 (636-708)	11.4 (11.3-11.5)	56 (54-57)
R/V *Discoverer* F22b	518 (513-521)		11.1	58	667 (654-739)	10.4 (10.3-10.4)	56 (56-57)
R/V *Discoverer* F22c	645 (634-656)		11.3	56	780 (764-789)	11.2 (10.8-11.5)	53 (52-54)

Blanks indicate no measurement, or only one measurement was made and thus there is no measurement range.

based CPCs recorded lower particle concentrations by about 10%.

Comparisons of airborne measurements with the UCPC onboard the R/V *Discoverer* did not demonstrate as good agreement as those from the other surface sites. Table 3 shows that the R/V *Discoverer* UCPC consistently recorded between 10 and 20% lower particle concentrations than instruments on the C-130. This is considerably higher than typical CPC sampling uncertainties of about 6% [*Twohy*, 1991]. It is not clear if the discrepancy is due to real differences in the sampled aerosol, difficulties with this type of intercomparison, or systematic sampling and measurement errors.

To explore possible causes for this discrepancy, we have studied the airborne-ship intercomparisons in more detail. Figures 7 and 8 show the aircraft altitude and aircraft and ship-based CN measurements during periods of flybys. In each plot the time of closest approach of the two platforms is identified. Because of the high relative speed, the ship and aircraft are only within a few kilometers for a short period of time (less than 1 min). Aircraft-based measurements of both CN_3 and a fraction of RAF CN_{15} are also plotted to show the agreement between airborne CN measurements during these intercomparisons. There were episodes during the first intercomparison (Figure 7, intercomparison time 0111 UTC) when the RAF CN_{15} concentrations where much higher than CN_3. These spikes are correlated with liquid water and are characteristic of spurious measurements due to droplet shatter. Owing to its smaller size, the RAF inlet was more sensitive to droplet shatter [*Weber et al.*, 1998a]. These data were not included in the intercomparisons shown in Table 3. Figures 7 and 8 show three features: (1) as Table 3 shows, the aircraft generally recorded higher CN concentrations; (2) there is greater variability in the aircraft measurement of CN compared to the ship-based measurement, likely due to the larger area sampled by the fastmoving aircraft combined with the spatial variability in CN concentrations; and (3) there is considerable vertical variability in the measured CN concentrations. Note that in Figures 7 and 8, the largest changes in the airborne CN measurements occur during periods of rapid changes in aircraft altitude.

Instead of intercomparing the airborne and ship measurements over the short time intervals when the platforms were in closest proximity, one can also compare measurements made by the two platforms over similar spatial scales. This approach attempts to account for the spatial variability in CN and ignores the temporal variability. In this analysis, for each pass shown in Figures 7 and 8, the average and range in the aircraft measurements are calculated over 7 to 30 min intervals during which the aircraft was in the boundary layer. The averaging interval depends on the length of time the aircraft was at the minimum altitude. For an aircraft speed of 100 m s^{-1}, in 30 min the aircraft samples over a distance of about 180 km. The ship data are analyzed over a similar spatial scale by averaging over a 6 hour time interval, centered on the time of the aircraft flyby. Assuming sampling scales for the ship are determined by the wind speed, this translates to an average surface wind speed of about 8 m s^{-1}, in reasonable agreement with measured values. The results from this analysis for each flyby are given in Table 5, and the average and range (error bars) in measured CN over similar spatial scales is plotted in Figure 9.

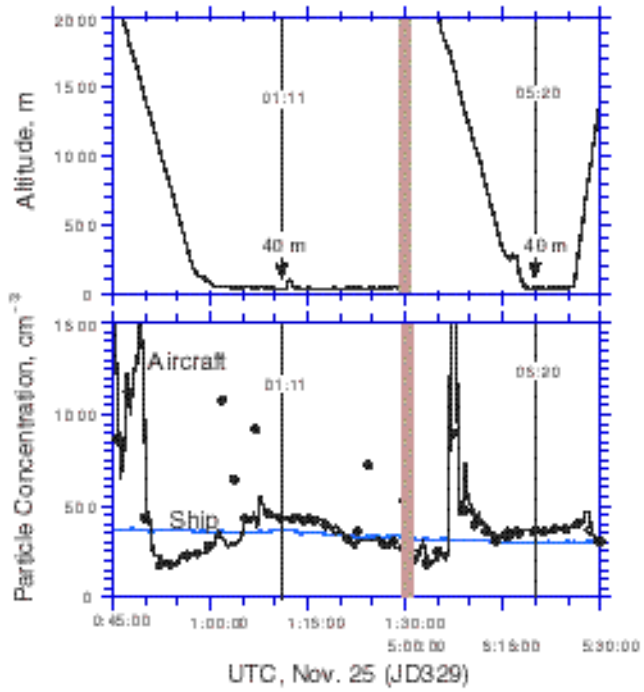

Figure 7. Aircraft altitude and airborne and ship-based measurements of CN concentrations during the two flybys identified as F15a and F15b in Table 3. Times of closest approach and corresponding aircraft altitude are given. For the airborne CN measurements, the continuous line is UH CN_3, and open diamonds are RAF CN_{15} measurements (for clarity, only a portion of the RAF CN_{15} data are plotted). The figure shows that during flybys the airborne measurements of CN were generally higher and more variable than the ship-based measurements.

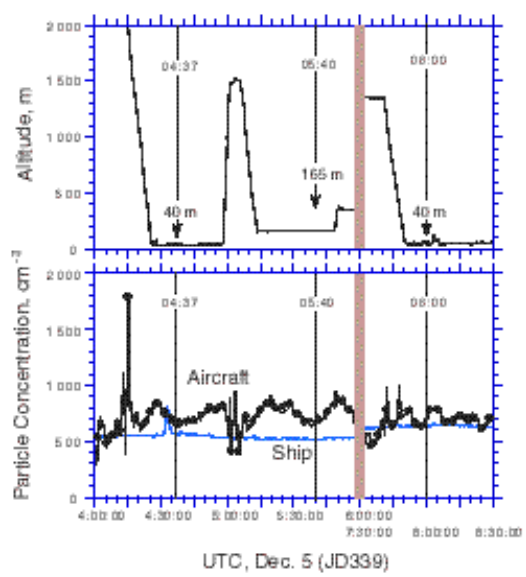

Figure 8. Same as Figure 7. Aircraft altitude and airborne and ship-based measurements of CN concentrations during the three flybys identified as F22a, F22b, and F22c in Table 3.

Table 5. Percent Difference of Ship- and C-130-Based CN_3 Measurements Averaged Over Similar Spatial Scales

	C-130				R/V *Discoverer*		
			CN, cm^{-3}		CN, cm^{-3}		
Julian Day	Flyby Time (UTC)	Interval, min	Average	Range	Average	Range	% Difference*, Ship versus Aircraft
329	0111	25	390	273-544	309	197-501	-21
329	0520	7	371	353-390	320	277-567	-14
339	0437	30	735	631-864	570	508-1129	-22
339	0540	30	761	645-897	569	508-803	-25
339	0800	30	716	629-806	584	508-676	-18

The ship measurements are averages over 6 hours of sampling centered at the time of the C-130 flyby.
*Percent difference is (Surface CN_3/RAF CN_{15}-1) x 100.

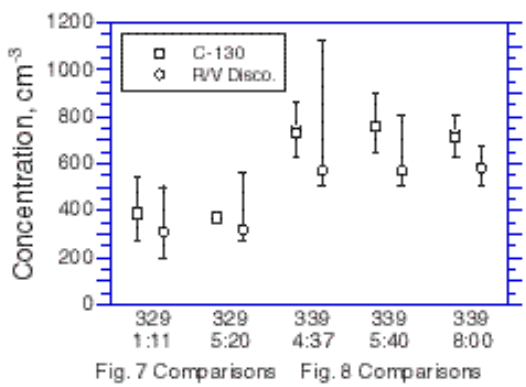

Figure 9. Comparison of airborne and ship-based measurements of CN by averaging over similar spatial scales. The data points show the average CN concentration over the time interval, and the error bars show the range in CN concentrations. The data plotted are shown in Table 5. The abscissa shows the Julian day and time of the flyby for each of the five intercomparisons. The averaging intervals for the airborne measurements range from 7 to 30 min (see Table 5). All ship-based measurements were averaged over 8 hours, centered about the time of the C-130 flyby. This figure shows that the airborne measurements of CN concentrations were generally higher than the ship-based measurements, similar to the findings from intercomparisons made during the brief periods of closest approach between aircraft and ship, shown in Figures 7 and 8.

For both methods of intercomparing airborne and ship CN measurements, the aircraft consistently recorded higher average concentrations by about 15 to 20%. We cannot provide a definitive explanation for this discrepancy. Possible causes are the following. (1) During flybys, the aircraft sampled in regions contaminated by ship plumes. This is unlikely, given that similar results were observed in upwind and downwind passes of the ship and in all but one pass, the ship's plume was readily identified in the aircraft measurements. (2) Authentic differences were due to vertical concentration gradients near the ocean surface. In this case, discrepancies would be lowest in a well-mixed boundary layer, for example, during periods of high wind speeds. Table 3 shows that there is little correlation between the magnitude of the discrepancy and surface wind speed. (3) Higher losses in the ship aerosol sampling system. Theory predicts minimal turbulent diffusional transmission losses in the ship sampling mast for particles larger than ~10 nm (less than 3% lost). However, other mechanisms leading to particle loss cannot be ruled out. (4) A systematic uncertainty in the calibration of the CPC sample flow rate. Given that another instrument (UH CPC) showed a systematic error in sample flow rate during the ACE 1 field operations, this is a plausible cause for the observed discrepancy. Overall, the ACE 1 intercomparisons between the airborne and surface-based sites suggest that these types of intercomparison studies can provide insights into the quality of the aerosol measurements.

5. Conclusions

Intercomparisons of CPC measurements of total particle number concentrations between measurements on a single aircraft, and between airborne and ship, and airborne and ground-based sites show that under background conditions in the remote marine troposphere, the measurement of fine aerosols (diameters between ~20 and 100 nm) is not overly sensitive to sampling techniques. This study suggests that accurate airborne measurements of ambient fine aerosols are possible. In contrast, accurate airborne measurements of nanoparticles (diameters between ~3 and 10 nm) are much more difficult, likely due to losses in sampling systems of these highly mobile particles.

The specific intercomparisons showed the following.

1. In the absence of 3-10 nm diameter particles, airborne measurements of particle concentrations had median values within 6% and had correlation coefficients better than 0.9, despite sampling from several different inlets located at different points on the aircraft and using differing arrangements to transport aerosols from inlets to instruments within the cabin.

2. Sampling in regions where 3-10 nm diameter particles comprised a significant fraction of the total particle number concentration, the airborne CPCs with similar particle size detection efficiencies (based on ground-based calibrations) recorded CN concentrations that varied, on average, by 60%. Differences in nanoparticle losses by diffusional deposition

mechanisms within inlets and transmission lines is likely a primary cause.

3. Despite their limitations, intercomparisons during flybys of ground- and ship-based measurements provide useful insights into the accuracy of the airborne measurements. We found that the airborne CN measurements were in fair agreement with surface measurements. Aircraft intercomparisons with ground-based sites at Cape Grim and Macquarie Island showed CN concentrations differing by about +5 and -10% respectively ($\{CN_{ground}-CN_{airborne}\}/CN_{ground}$), and by about -10 to -25% for airborne versus ship-based measurements. We suspect one possible cause for the lower concentrations recorded by the ship is the uncertainties in UCPC sample flow rates.

Notation

ACE 1	Aerosol Characterization Experiment 1.
CN	condensation nuclei (particles measured with a CPC).
CN_{3-4}	estimate of nominally 3-4 nm particle concentrations from PHA UCPC.
CN_3	condensation nuclei concentrations measured with a UCPC.
CN_{10}	condensation nuclei concentrations measured with a TSI 3010 CPC.
CN_{15}	condensation nuclei concentrations measured with a TSI 3760 CPC.
CPC	condensation particle counter.
CST	Colorado State University, Fort Collins CO.
NCAR	National Center for Atmospheric Research.
PHA UCPC	pulse height analysis ultrafine condensation particle counter.
PMEL	Pacific Marine Environmental Laboratory, Seattle, Washington.
RAF	(NCAR) Research Aviation Facility.
TSI	TSI Incorporated, St. Paul, Minnesota.
UCPC	ultrafine condensation particle counter.
UH	University of Hawaii, Honolulu.
UM	University of Minnesota, Minneapolis.
UW	University of Washington, Seattle.

Acknowledgments. This research is a contribution to the International Global Atmospheric Chemistry (IGAC) Core Project of the International Geosphere-Biosphere Program (IGBP) and is part of the ICAC Aerosol Characterization Experiments (ACE). This research was supported by NASA through grant NAGW-3767. F.J.B. acknowledges the support of an Environmental Protection Agency (EPA) fellowship and office of Naval Research grant N00014-93-0420 P000. Research at BNL was performed under the auspices of the U.S. Department of Energy contract DE-AC02-98CH10886 Atmospheric Chemistry Program within the Office of Health and Environmental Research. The authors also thank all those who contributed to the ACE 1 program, including the staff of the Research Aviation Facility (RAF) of the National Center for Atmospheric Research (NCAR).

References

Bates, T. S., B. J. Huebert, J. L. Gras, F. B. Griffiths, and P. A. Durkee, The International Global Atmospheric Chemistry (IGAC) Project's First Aerosol Characterization Experiment (ACE1): Overview, *J. Geophys. Res.*, *103*, 16,297-16,318, 1998.

Baumgardner, D., and B. Huebert, The airborne aerosol inlet workshop: Meeting report, *J. Aerosol. Sci.*, *24*, 835-846, 1993.

Belyaev, S. P., and L. M. Levin, Techniques for collection of representative aerosol samples, *J. Aerosol Sci.*, *5*, 325-338, 1974.

Covert, D. S., A. Wiedensohler, P. Aalto, J. Heintzenberg, P. McMurry, and C. Leck, Aerosol number, size distributions from 3 to 500 nm diameter in the summer Arctic marine boundary layer, *Tellus, Ser. B*, *48*, 197-212, 1996.

Friedlander, S. K., *Smoke, Dust and Haze*, John Wiley, New York, 1977.

Gormley, P. G., and M. Kennedy, Diffusion from a stream flowing through a cylindrical tube, *Proc. R. Irish Acad.*, *52*, 163-169, 1949.

Huebert, B. J., G. Lee, and W. L. Warren, Airborne aerosol inlet passing efficiency measurement, *J. Geophys. Res.*, *95*, 16,369-16,381, 1990.

Knutson, E. O., and K. T. Whitby, Aerosol classification by electrical mobility: Apparatus, theory, and applications, *J. Aerosol Sci.*, *6*, 443-451, 1975.

Liu, B. Y. H., and J. K. Agarwal, Experimental observations of aerosol deposition in turbulent flow, *J. Aerosol Sci.*, *5*, 145-155, 1974.

Porter, J. N., A. D. Clarke, G. Ferry, and R. F. Pueschel, Aircraft studies of size-dependent aerosol sampling through inlets, *J. Geophys. Res.*, *97*, 3815-3824, 1992.

Sheridan, P. J., and R. B. Norton, Determination of the passing efficiency for aerosol chemical species through a typical aircraft-mounted, diffuser-type aerosol inlet system, *J. Geophys. Res.*, *103*, 8215-8225, 1998.

Stolzenburg, M. R., An ultrafine aerosol size distribution measuring system, Ph.D. thesis, Univ. of Minn., Twin Cities, 1988.

Twohy, C., Airborne condensation nucleus counter user's guide, *NCAR Tech. Note NCAR/TN-356+EDD*, Natl. Cent. for Atmos. Res., Boulder, Colo., 1991.

Twohy, C., and D. Rogers, Airflow and water drop trajectories at instrument sampling points around the Beechcraft King Air and Lockheed Electra, *J. Atmos. Oceanic Technol.*, *10*, 566-578, 1993.

Wang, S. C., and R. C. Flagan, Scanning electrical mobility spectrometer, *Aerosol Sci. Technol.*, *13*, 230-240, 1990.

Weber, R. J., P. H. McMurry, F. L. Eisele, and D. J. Tanner, Measurement of expected nucleation precursor species and 3 to 500 nm diameter particles at Mauna Loa Observatory, Hawaii, *J. Atmos. Sci.*, *52*, 2242-2257, 1995.

Weber, R. J., A. D. Clarke, M. Litchy, J. Li, G. Kok, R. D. Schillawski, and P. H. McMurry, Spurious aerosol measurements when sampling from aircraft in the vicinity of clouds, *J. Geophys. Res.*, *103*, 28,337-28,346, 1998a.

Weber, R. J., et al., A study of new particle formation and growth involving biogenic trace gas species measured during ACE 1, *J. Geophys. Res.*, *103*, 16,385-16,396, 1998b.

Wiedensohler, A., et al., Intercomparison study of the size-dependent counting efficiency of 26 condensation particle counters, *Aerosol Sci. Technol.*, *27*, 224-242, 1997.

Zhang, Z., and B. Y. H. Liu, Performance of TSI 3760 condensation nuclei counter at reduced pressures and flow rates, *Aerosol Sci. Technol.*, *15*, 228-238, 1991.

T. S. Bates, NOAA Pacific Marine Environmental Laboratory, Seattle, WA 98115.

F. J. Brechtel, Environmental Chemistry Division, Building 815E, Department of Applied Science, Brookhaven National Laboratory, P.O. Box 5000, Upton, NY 11973-5000.

A. D. Clarke, School of Ocean and Earth Science and Technology, University of Hawaii, Honolulu, HI 96822.

D. S. Covert, Department of Atmospheric Sciences, University of Washington, Seattle, WA 98195.

G. L. Kok, Research Aviation Facility, National Center for Atmospheric Research, Boulder, CO 80307.

P. H. McMurry, Particle Technology Laboratory, Department of Mechanical Engineering, University of Minnesota, MN 55455.

R. J. Weber, Georgia School of Earth and Atmospheric Sciences, Georgia Institute of Technology, Atlanta, GA 30332-0340. (email: rweber@eas.gatech.edu)